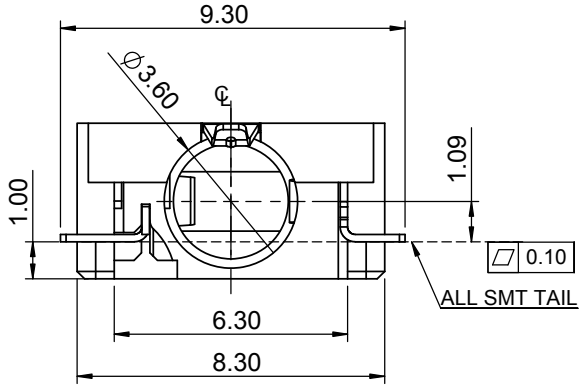

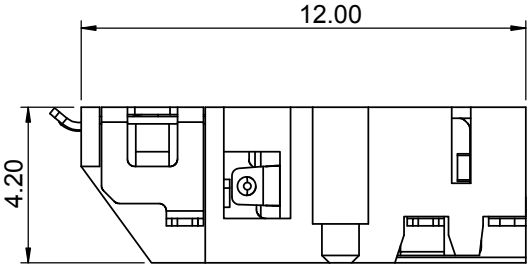

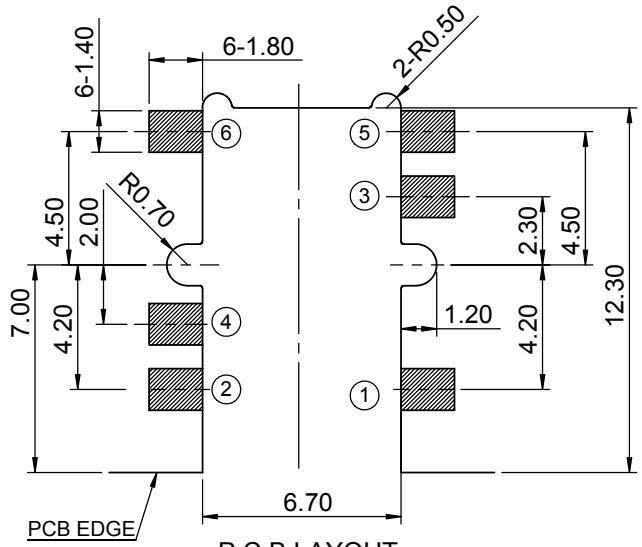

P.C.B LAYOUT

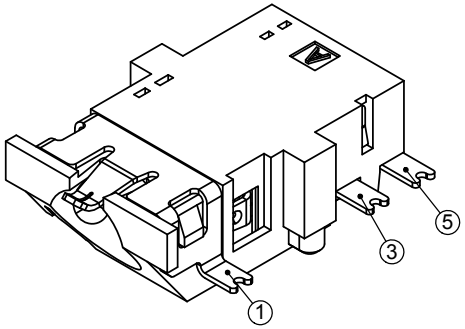

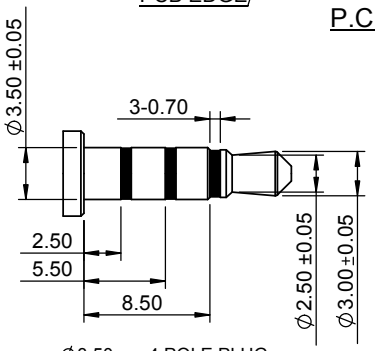

Ø3.50mm 4 POLE PLUG
DETAIL DRAWING(2:1)

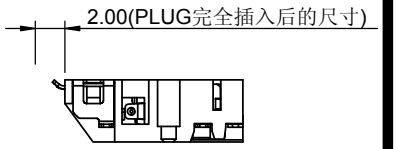

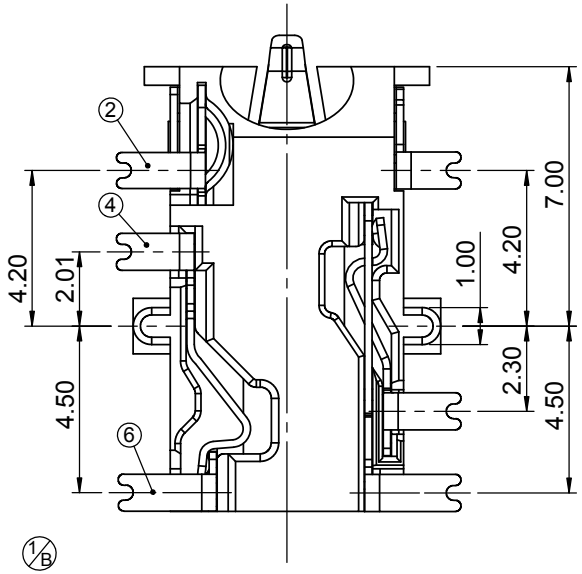

NOTES:
1.CONTACT CURRENT RATING: 1A.
2. CONTACT RESISTANCE: 50 mΩ MAX.;
3. INSULATION RESISTANCE: 100MΩ MIN.;
4. DIELECTRIC WITHSTANDING: 500V AC MIN.;
5. DURABILITY: 5,000 CYCLES MIN.;
6. CONNECTOR MATING FORCES:
29.4N (3.00Kgf) MAX.;
7. CONNECTOR UNMATING FORCES:
2.94N(0.30Kgf) MIN.;

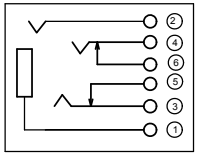

SCHEMATIC

NO.	DESCRIPTION	MAT,L	COLOR	REMARK
7	HOUSING	HIGH TEMP	BLACK	———
6	TERMINAL 6	COPPER ALLOY	———	Au PLATED
5	TERMINAL 5	COPPER ALLOY	———	Au PLATED
4	TERMINAL 4	COPPER ALLOY	———	Au PLATED
3	TERMINAL 3	COPPER ALLOY	———	Au PLATED
2	TERMINAL 2	COPPER ALLOY	———	Au PLATED
1	TERMINAL 1	COPPER ALLOY	———	Au PLATED

CUSTOMER COPY

深圳市鑫南天科技有限公司
Shenzhen XinNanTian Industrial Co.,Ltd

TITLE:	Ø3.50 mm PHONE JACK CONNECTOR
PART NO.	XNT-T06G1-AZL2
PRODUCT SPEC.	XNT-RJZ-0001889
C ING FILE NAME.	XNT-T06G1-AZL2-C
SCALE 5:1	UNIT:mm A4 SHEET: 1 of 2

ECN NO.	REV	DATE	DESCRIPTION	CHANGE	APPRO.
		03/06/'13	B1:图面规范化		
———	A	09/10/'12	NEW	———	———

GENERAL TOLERANCE UNLESS OTHERWISE NOTED

Angle	±2°	
X	±0.50	
.X	±0.30	
.XX	±0.15	

DESIGN	COCO	03/06/'13
CHECK	JANY	03/06/'13
APPRO.	JEFF	03/06/'13