由 Autodesk 教育版产品制作

＊ 所有原料材质，生产制程，电镀必须符合ROHS要求

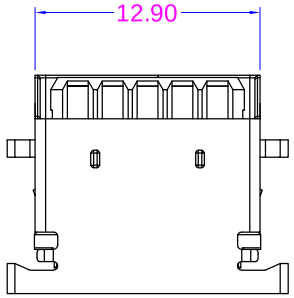

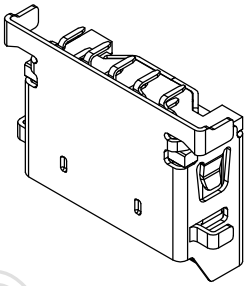

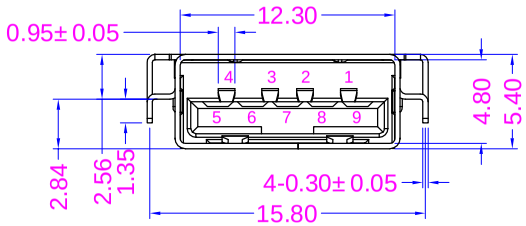

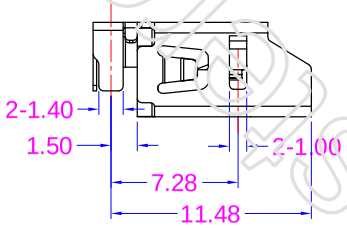

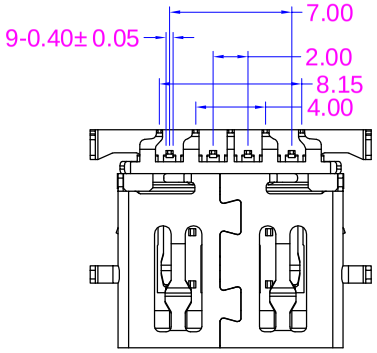

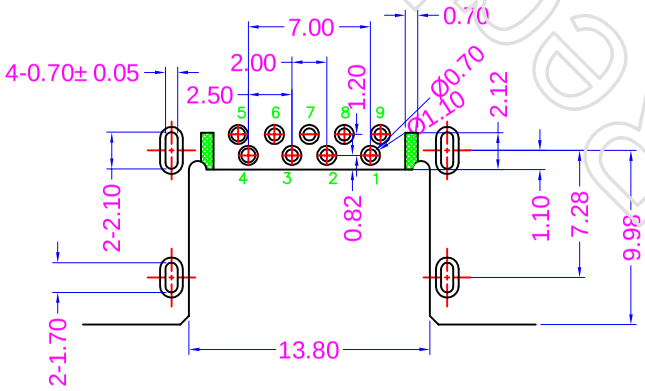

NOTE:

1.MATERIAL:
- 1.1 INSULATOR:HIGH TEMPERATURE PLASTIC UL 94 V-0;
- 1.2 CONTACT:COPPER ALLOY(T=0.2mm)
- 1.3 SHELL:SUS201(T=0.30mm)

2.ELECTRICAL CHARACTERISTICS;
- 2.1 CONTACTRESISTANCE:30m Max
- 2.2 CONTACT CURRENT RATING:1.5A
- 2.3 DIELECTRIC WITHSTANDING VOLTAGE:500 V R.M.S.
- 2.4 INSULATION RESISTANCE 100 MEGOHMS M
- 2.5 OPERATING TEMPEROTURE:-40°C ~ 85°C
- 2.6 RATE VOLTAGE: 30V DC

3 MECHANICAL CHARACTERISTICS:
- 3.1 MATING FORCE:10 N Min INITIAL; 8 N Min AFTER TEST
- 3.2 UNMATED FORCE:35 N Max
- 3.3 DURABILITY:5,000 CYCLES

4.PLATING
- 4.1 TERMINAL CONTACT:GOLD PLATING ALL OVER 50u" MIN NICKEL AND 80u"MIN Matte Tin NICKEL IN SOLDER AREA(SEE TAB)
- 4.2 SHELL:50u"MIN. NICKEL ALL OVER

Pin #	SIGNAL NAME	DESCRIPTION	MATING SEQUENCE
1	VBUS	POWER	SECOND
2	D-	USB 2.0 DIFFERENTIAL PAIR	THIRD
3	D+		
4	GND	GROUND FOR POWER RETURN	SECOND
5	StdA_SSRX-	SUPERSPEED RECEIVER DIFFERENTIAL PAIR	LAST
6	StdA_SSRX+		
7	GND_DRAIN	GROUND FOR SIGNAL RETURN	
8	StdA_SSTX-	SUPERSPEED TRANSMITTER DIFFERENTIAL PAIR	
9	StdA_SSTX+		
Shell	Shield	CONNECTOR METAL SHELL	FRIST

TOLERANCE: ±0.05, THICKNESS: 1.0~1.2mm

RECOMMENDED PCB LAYOUT

(TOP VIEW)

KEEP OUT AREA

深圳市鑫南天科技有限公司

Shen zhen Shi Xin Nan Tian Industrial Co., Ltd

DIMENSIONS INIT: mm

UNLESS OTHERWISE SPECIFIABLE

X.	±0.50	X.°	±10°
X.X	±0.30		
X.XX	±0.20	X.XX°	±2°
X.XXX	±0.15		

PRODUCT NAME : USB A TYPE 3.0-9P IN 外壳四脚全插 沉板深度2.84 板上高度2.56 半直半斜口	DRAWING: COCO	DATE: 2008/08/08	
PRODUCT NO. : USBA30-CB284BZBXK	CHECK: JANY	DATE: 2008/08/08	
DRAWING NO. : XNT-USB30-9P001	APPROVED: JEFF	DATE: 2008/08/08	
	SCALE: 1:1	DWG ID: P D	REV.: B / PAGE: 1 OF 1

REVISION NO.	ECR NO.	DESCRIPTION	MARK	DATE

由 Autodesk 教育版产品制作